AutomaticHeating
efficiency performance solutions

Gas, Dual Fuel & Oil Burners

Edition 2.6

ENTERPRISE

Gas, Dual Fuel & Oil Burners

Continued investment in research and development ensures our burners deliver optimised performance and minimum ecological impact.

Our burners can be equipped with the most modern automatic mechanical or electronic modulation systems that maintain the correct gas/air ratio. In this way, the burner's thermal load is adapted with precision to the need for heat in every moment of operation in order to guarantee optimised output at every point in combustion.

Enterprise Natural Gas Burners pg 4

Enterprise Light Oil Burners pg 11

Enterprise Dual Fuel Burners pg 12

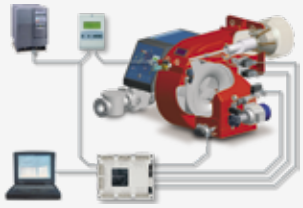

LMV Electronic Burner Control pg 13

Enterprise Natural Gas Burners

35 - 8,000kW

The Enterprise natural gas burners cover a firing range from 35kW to 10,000kW and are suitable for small, medium and large applications.

The Enterprise burners are designed to be aesthetic and functional but at the same time gives prominence to innovative technologies; in fact all components can be fitted onto a backing plate which can be moved and attached to special fixings within the burner to make maintenance easier.

The models can be supplied for operations as follows:

- TN: On / Off
- AB: High / Low
- PR: Progressive
- MD: Modulating

Enterprise burners feature a high performance combustion head which ensures safety and increased efficiency. These units also feature simplified maintenance through convenient access to essential areas. A cam driven by the modulating motor ensures a smooth transition from low to high fire.

Modbus OCI-412

Low NOx models

Enterprise gas burners are also available in Low NOx models.

Our low NOx burners benefit from the installation of an innovative combustion head that re-distributes the gaseous element according to different weights and in a negative pressure zone, which allows a portion of the combusted gases to re-circulate

Low NOx burner combustion head

Enterprise Natural Gas Burners 20kW - 85kW

Performance Data

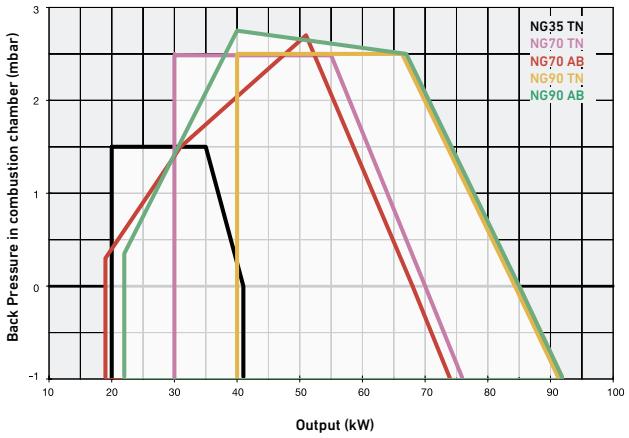

Product Code	Thermal Output Minimum kW	Thermal Output Maximum kW	Electrical Supply AC volts/Hz	Motor Output W	Gas Train Diameter inch
NG 35.TN.15	20	41	240/50	75	1/2
NG 70.TN.15	30	70	240/50	100	1/2
NG 70.AB.15	19	68	240/50	100	1/2
NG 90.TN.15	40	85	240/50	100	3/4
NG 90.TN.20	40	85	240/50	100	3/4
NG 90.AB.15	22	85	240/50	100	3/4
NG 90.AB.20	22	85	240/50	100	3/4

Valve train sizes may vary according to specified gas pressure.

Dimensional Data

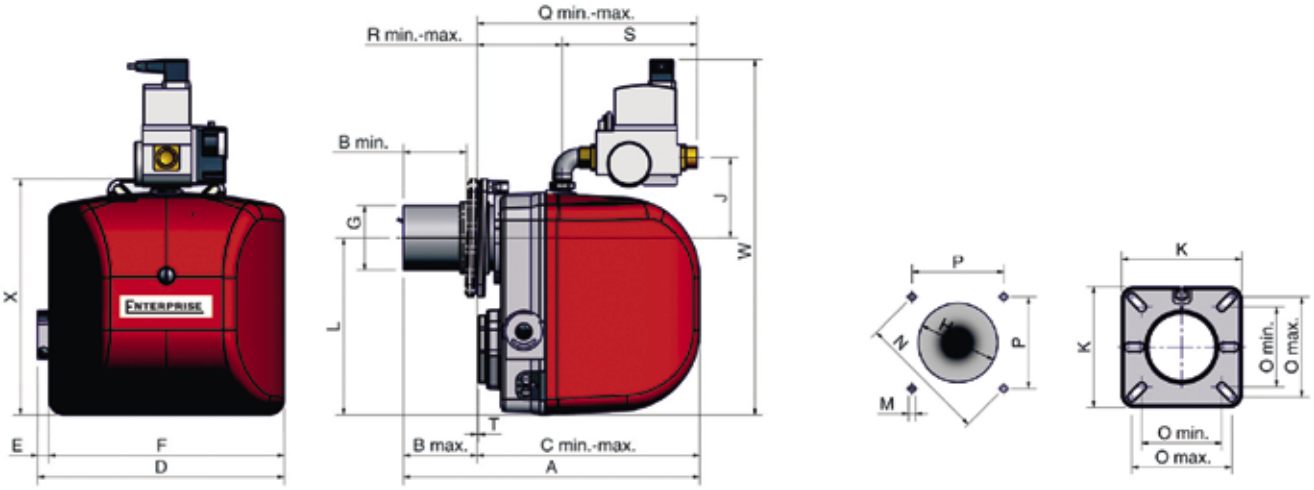

Model	A	B min/max	C min/max	D	E	F	G	H	K	J	L
NG35	338	78/100	240/262	269	14	255	Ø80	Ø95	145	86	194
NG70	365	78/91	274/287	304	14	291	Ø80	Ø95	145	-	218
NG90	365	66	299	304	14	291	Ø80	Ø95	145	99	218

Model	M	N	O min/max	P	Q min/max	R min/max	S	T	U min/max	V	W	X
NG35	M8	155	96/120	112	258	91/113	167	6	45/67	94	400	266
NG70	M8	155	96/120	112	271/284	105/118	167	2	-	-	438	291
NG90	M8	155	96/120	112	292/363	125/196	167	2	-	-	438	291

All measurements in mm.

Enterprise Natural Gas Burners 60kW - 200kW

Performance Data

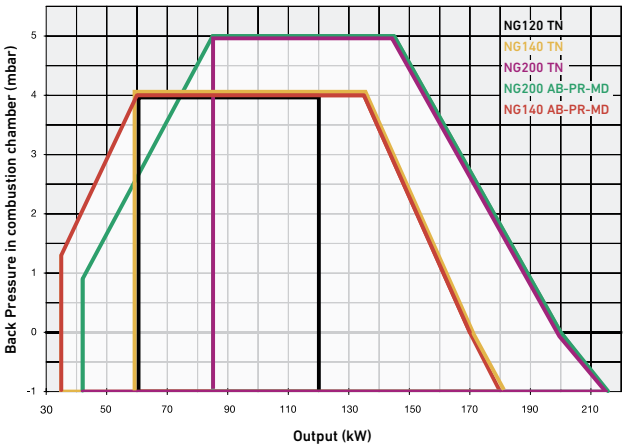

Product Code	Thermal Output Minimum kW	Thermal Output Maximum kW	Electrical Supply AC volts/Hz	Motor Output W	Gas Train Diameter inch
NG 120.TN.20	60	120	240/50	180	3/4
NG 140.TN.20	60	170	240/50	180	3/4
NG 140.TN.25	60	170	240/50	180	1
NG 140.AB.20	35	170	240/50	180	3/4
NG 140.AB.25	35	170	240/50	180	1
NG 200.TN.20	85	200	240/50	180	3/4
NG 200.TN.25	85	200	240/50	180	1
NG 200.AB.20	42	200	240/50	180	3/4
NG 200.AB.25	42	200	240/50	180	1

Valve train sizes may vary according to specified gas pressure.

Dimensional Data

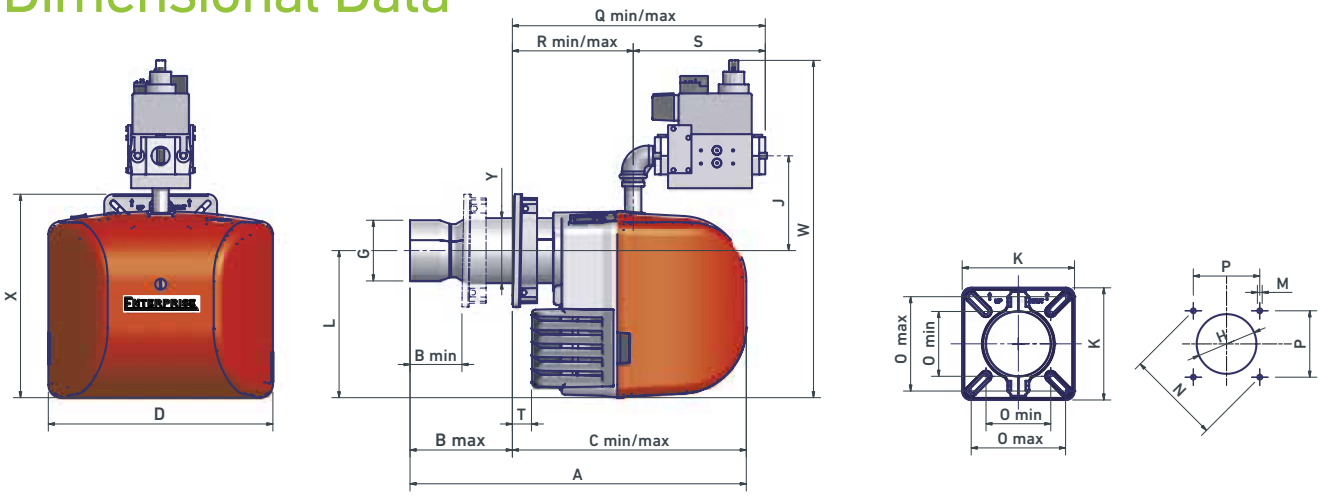

Model	A	B min/max	C min/max	D	G	H	J	K	L	M	N	O min/max	P	Q min/max	R min/max	S	T	W	X	Y
NG120	560	85/170	390/475	373	101	128	158	188	245	M8	188	108/158	133	376/461	201/286	175	32	537	340	108
NG140	560	85/170	390/475	373	101	128	158	188	245	M8	188	108/158	133	420/506	201/286	220	32	560	340	108
NG200	560	85/170	390/475	373	117	137	158	188	245	M8	188	108/158	133	376/461	201/286	175	32	537	340	108

All measurements in mm.

AutomaticHeating efficiency performance solutions

Enterprise Natural Gas Burners 95kW - 570kW

Performance Data

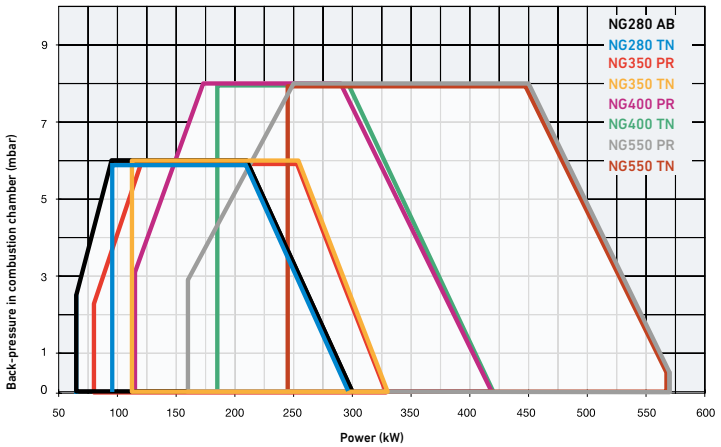

Product Code	Thermal Output Minimum kW	Thermal Output Maximum kW	Electrical Supply AC volts/Hz	Motor Output W	Gas Train Diameter inch
NG280.TN	95	300	240/50	250	1, 1-1/4, 1-1/2
NG280.AB	65	300	240/50	250	1, 1-1/4, 1-1/2
NG350.TN	115	330	240/50	370	1, 1-1/4, 1-1/2
NG350.PR	80	330	240/50	370	1, 1-1/4, 1-1/2
NG350.MD	80	330	240/50	370	1, 1-1/4, 1-1/2
NG400.TN	185	420	240/50	450	1, 1-1/4, 1-1/2,2
NG400.PR	115	420	240/50	450	1, 1-1/4, 1-1/2,2
NG400.MD	115	420	240/50	450	1, 1-1/4, 1-1/2,2
NG550.TN	245	570	240/50	620	1-1/4. 1-1/2,2
NG550.PR	160	570	240/50	620	1-1/4. 1-1/2,2
NG550.MD	160	570	240/50	620	1-1/4. 1-1/2,2

Valve train sizes may vary according to specified gas pressure.

Dimensional Data

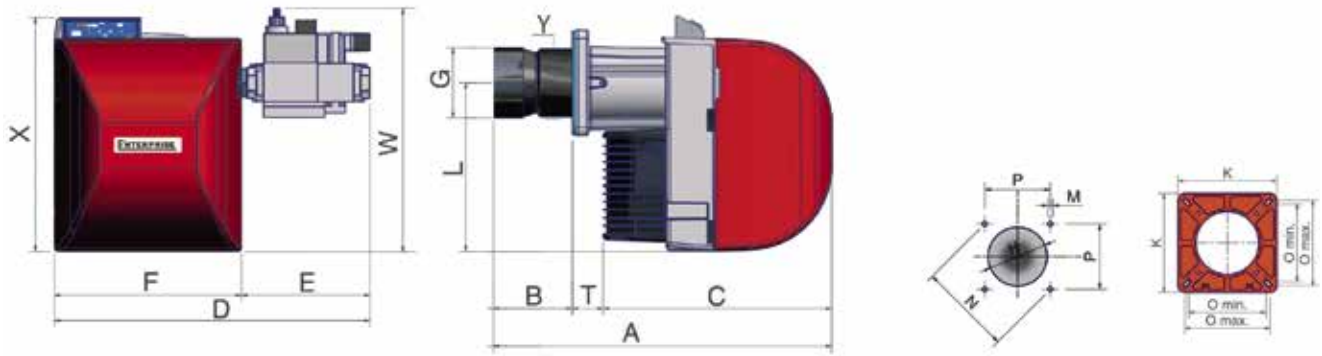

Model	A	B	C	F	G	H	J	K1	K2	M	N	O min/max	P	Q	R	S	T	X	Y
NG280	732	162.5	570	396	117	137	348	215	223	M10	219	131/179	155	541	366	175	128	491	108
NG350	748	178	570	396	125	164	348	215	223	M10	219	131/179	155	541	366	175	89	491	144
NG400	768	198	570	396	144	164	348	215	223	M10	219	131/179	155	541	366	175	89	491	144
NG550	893	198	570	396	144	164	348	215	223	M10	247	131/179	155	541	366	175	89	491	144

All measurements in mm.

Enterprise Natural Gas Burners 160kW - 2050kW

Performance Data

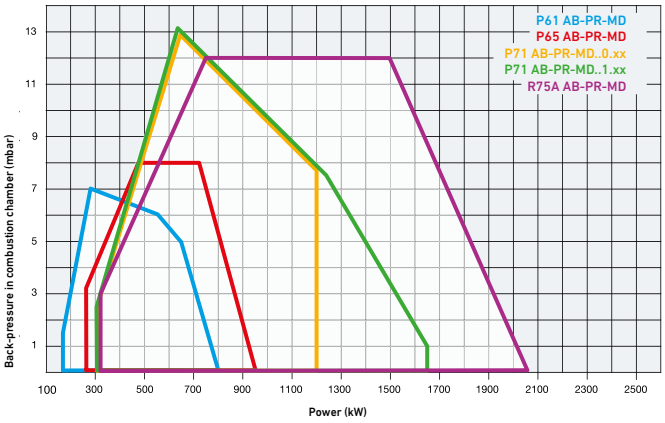

Product Code	Thermal Output Minimum kW	Thermal Output Maximum kW	Electrical Supply AC volts/Hz	Motor Output kW	Gas Train Diameter inch
P61	160	800	415/50	1.1	2-2-1/2
P65	270	970	415/50	1.5	2-2-1/2
P71	300	1200	415/50	2.2	2-2-1/2-3
P71.1	300	1650	415/50	2.2	2-2-1/2-3
R75A	320	2050	415/50	3	2-2-1/2-3

Dimensional Data

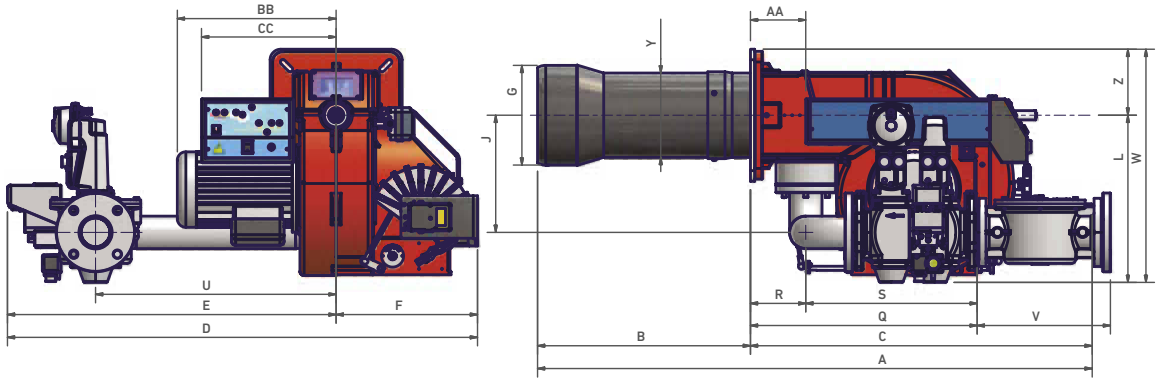

P60

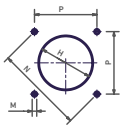

Boiler drilling

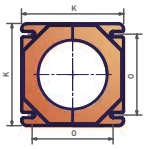

Burner flange

P65, P72, 73A

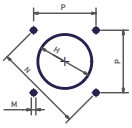

Boiler drilling

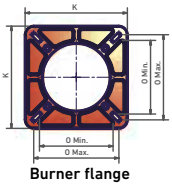

Burner flange

Type	Model	AS	AL	AA	B(S*)	B(L*)	BB	C	CC	D	E	F	G	H	J	K	L	M	N	O min/max	P	Q	R	S	U	V	W	Y	Z
P61	M-.xx.x.IT.A.0.32	1079	1169	99	343	433	314	736	298	812	500	312	184	204	210	240	344	M10	269	190	190	190	341	112	229	444	-	464	162	120
P61	M-.xx.x.IT.A.0.40	1079	1169	99	343	433	314	736	298	812	500	312	184	204	210	240	344	M10	269	190	190	190	439	112	327	444	-	464	162	120
P61	M-.xx.x.IT.A.0.50	1079	1169	99	343	433	314	736	298	812	500	312	184	204	210	240	344	M10	269	190	190	190	447	112	335	444	-	464	162	120
P61	M-.xx.x.IT.A.0.65	1079	1169	99	343	433	314	736	298	997	685	312	184	204	250	240	420	M10	269	190	190	190	515	112	403	540	313	540	162	120
P65	M-.xx.x.IT.A.0.40	1129	1219	130	326	416	373	803	316	900	568	332	184	218	208	300	376	M10	330	216	250	233	457	130	327	519	-	531	198	155
P65	M-.xx.x.IT.A.0.50	1129	1219	130	326	416	373	803	316	900	568	332	184	218	208	300	376	M10	330	216	250	233	465	130	335	519	-	531	198	155
P65	M-.xx.x.IT.A.0.65	1129	1219	130	326	416	373	803	316	998	666	332	184	218	275	300	393	M10	330	216	250	233	533	130	403	565	313	548	198	155
P71	M-.xx.x.IT.A.1.40	1188	1298	130	385	495	373	803	316	1026	694	332	234	264	208	300	376	M10	330	216	250	233	457	130	327	519	-	531	198	155
P71	M-.xx.x.IT.A.1.50	1188	1298	130	385	495	373	803	316	1026	694	332	234	264	208	300	376	M10	330	216	250	233	465	130	335	519	-	531	198	155
P71	M-.xx.x.IT.A.1.65	1188	1298	130	385	495	373	803	316	1104	772	332	234	264	275	300	393	M10	330	216	250	233	533	130	403	565	313	548	198	155
P71	M-.xx.x.IT.A.1.80	1188	1298	130	385	495	373	803	316	1106	774	332	234	264	275	300	407	M10	330	216	250	233	574	130	444	565	344	562	198	155
R75A	M-.xx.S.IT.A.1.50	1429	-	138	503	-	374	926	330	1062	700	362	254	270	229	300	420	M10	330	216	250	233	465	130	335	525	-	575	210	155
R75A	M-.xx.S.IT.A.1.65	1429	-	138	503	-	374	926	330	1139	777	362	254	270	296	300	420	M10	330	216	250	233	533	130	403	570	313	575	210	155
R75A	M-.xx.S.IT.A.1.80	1429	-	138	503	-	374	926	330	1141	779	362	254	270	296	300	428	M10	330	216	250	233	574	130	444	570	344	583	210	155

All measurements in mm.

AutomaticHeating efficiency performance solutions

Enterprise Natural Gas Burners 480kW - 8000kW

Performance Data

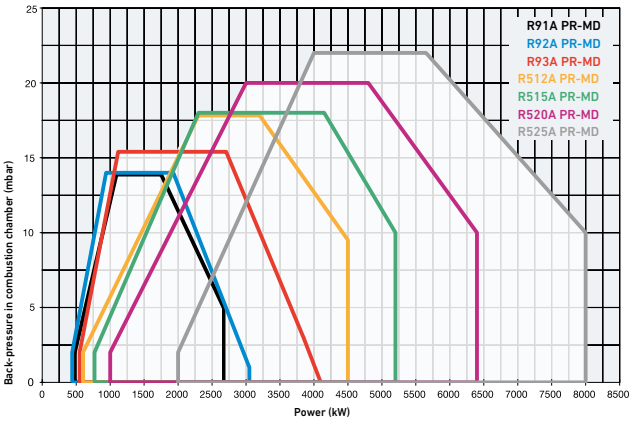

Product Code	Thermal Output Minimum kW	Thermal Output Maximum kW	Electrical Supply AC volts/Hz	Motor Output kW	Gas Train Diameter inch
R91A	480	2670	415/50	4	2
R92A	480	3050	415/50	5.5	2
R93A	550	4100	415/50	7.5	2
R512A	600	4500	415/50	9.2	2
R515A	770	5200	415/50	11	2
R520A	1000	6400	415/50	15	2
R525A	2000	8000	415/50	18.5	2

Dimensional Data

R91A, R92A, R93A

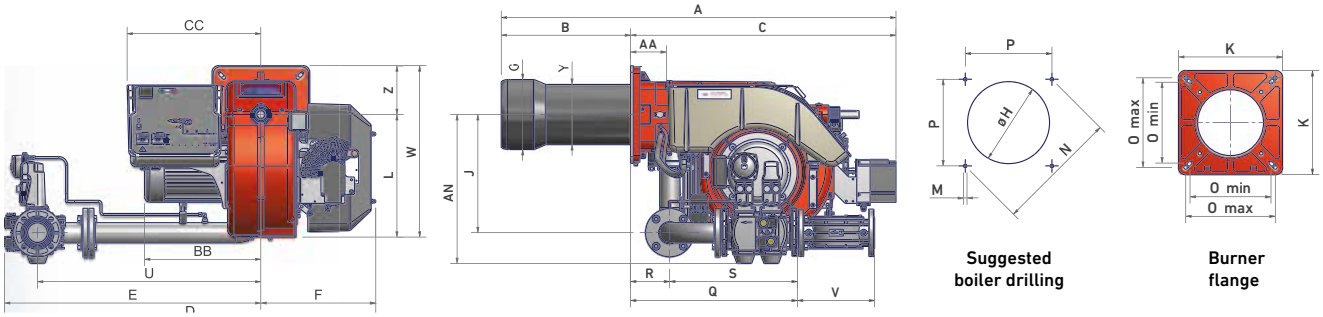

Type	Model	A	AA	AN	B	BB	C	CC	D	E	F	G	H	J	K	L	M	N	O min/max		P	Q	R	S	U	V	W	Y	Z
R91A	M-.xx.S.IT.A.1.50	1495	135	550	490	441	1005	507	1160	765	435	265	295	447	360	464	M12	424	280	310	300	532	148	384	624	190	649	228	185
R91A	M-.xx.S.IT.A.1.65	1495	135	564	490	441	1005	507	1406	971	435	265	295	447	360	464	M12	424	280	310	300	632	148	484	846	292	649	228	185
R91A	M-.xx.S.IT.A.1.80	1495	135	579	490	441	1005	507	1437	1002	435	265	295	447	360	464	M12	424	280	310	300	683	148	535	875	313	649	228	185
R91A	M-.xx.S.IT.A.1.100	1495	135	592	490	441	1005	507	1520	1085	435	265	295	447	360	464	M12	424	280	310	300	790	148	642	942	353	649	228	185
R92A	M-.xx.S.IT.A.1.50	1495	135	550	490	441	1005	507	1160	725	435	269	299	447	360	464	M12	424	280	310	300	532	148	384	624	190	649	228	185
R92A	M-.xx.S.IT.A.1.65	1495	135	564	490	441	1005	507	1406	971	435	269	299	442	360	464	M12	424	280	310	300	632	148	484	846	292	649	228	185
R92A	M-.xx.S.IT.A.1.80	1495	135	579	490	441	1005	507	1437	1002	435	269	299	447	360	464	M12	424	280	310	300	683	148	535	875	313	649	228	185
R92A	M-.xx.S.IT.A.1.100	1495	135	592	490	441	1005	507	1520	1859	435	269	299	447	360	464	M12	424	280	310	300	790	148	642	942	353	649	228	185
R93A	M-.xx.S.IT.A.1.50	1500	135	550	495	493	1005	507	1160	725	435	304	344	447	360	464	M12	424	280	310	300	532	148	384	624	190	649	228	185
R93A	M-.xx.S.IT.A.1.65	1500	135	564	495	493	1005	507	1406	971	435	304	344	447	360	464	M12	424	280	310	300	632	148	484	846	292	649	228	185
R93A	M-.xx.S.IT.A.1.80	1500	135	579	495	493	1005	507	1520	1002	435	304	344	447	360	464	M12	424	280	310	300	683	148	535	875	313	649	228	185
R93A	M-.xx.S.IT.A.1.100	1500	135	592	495	493	1005	507	1160	1085	435	304	344	447	360	464	M12	424	280	310	300	790	148	642	942	353	649	228	185

All measurements in mm.

Dimensional Data

R512A, R515A, R520A, R525A

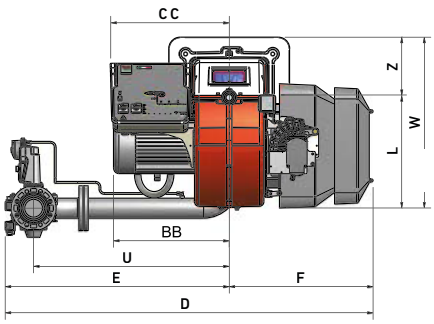

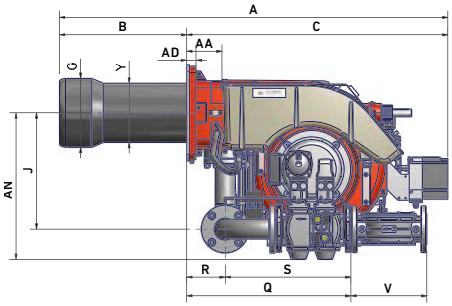

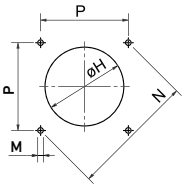

Suggested boiler drilling

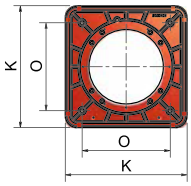

Burner flange

Type	Model	A	AA	AD	AN	B	BB	C	CC	D	E	F	G	H	J	K	L	M	N	O	P	Q	R	S	U	V	W	Y	Z
R512A	M-.xx.S.IT.A.1.50	1683	220	35	595	530	517	1153	532	1590	946	644	340	380	494	540	494	M14	552	390	390	763	149	614	845	190	764	328	270
R512A	M-.xx.S.IT.A.1.65	1683	220	35	611	530	517	1153	532	1613	969	644	340	380	494	540	494	M14	552	390	390	636	149	487	845	292	764	328	270
R512A	M-.xx.S.IT.A.1.80	1683	220	35	626	530	517	1153	532	1645	1002	644	340	380	494	540	494	M14	552	390	390	687	149	538	875	313	764	328	270
R512A	M-.xx.S.IT.A.1.100	1683	220	35	595	530	517	1153	532	1726	1082	644	340	380	494	540	494	M14	552	390	390	791	149	642	942	353	764	328	270
R515A	M-.xx.S.IT.A.1.50	1683	220	35	595	530	517	1153	532	1590	946	644	380	420	494	540	494	M14	552	390	390	763	149	614	845	190	764	328	270
R515A	M-.xx.S.IT.A.1.65	1683	220	35	611	530	517	1153	532	1613	969	644	380	420	494	540	494	M14	552	390	390	636	149	487	845	292	764	328	270
R515A	M-.xx.S.IT.A.1.80	1683	220	35	626	530	517	1153	532	1645	1002	644	380	420	494	540	494	M14	552	390	390	687	149	538	875	313	764	328	270
R515A	M-.xx.S.IT.A.1.100	1683	220	35	639	530	517	1153	532	1726	1082	644	380	420	494	540	494	M14	552	390	390	791	149	642	942	353	764	328	270
R520A	M-.xx.S.IT.A.1.50	1683	220	35	595	530	517	1153	532	1590	946	644	400	440	494	540	494	M14	552	390	390	755	149	614	844	190	764	328	270
R520A	M-.xx.S.IT.A.1.65	1683	220	35	611	530	517	1153	532	1613	669	644	400	440	494	540	494	M14	552	390	390	636	149	487	845	292	764	328	270
R520A	M-.xx.S.IT.A.1.80	1683	220	35	626	530	517	1153	532	1645	1002	644	400	440	494	540	494	M14	552	390	390	687	149	538	875	313	764	328	270
R520A	M-.xx.S.IT.A.1.100	1683	220	35	639	530	517	1153	532	1726	1082	644	400	440	494	540	494	M14	552	390	390	791	149	642	942	353	764	328	270

All measurements in mm.

Enterprise Light Oil Burners

21 - 4,100kW

The Enterprise light oil burners cover a firing range from 21kW to 4,100kW and are suitable for small and medium applications.

Combustion air can be easily set by the adjusting screw without removing the cover. The cover, easily removable, is heat resistant (ABS material).

The burner is designed to be aesthetic and functional but at the same time gives prominence to innovative technologies; in fact all components can be fitted into a backing plate which can be moved and attached to special fixings within the burner to make maintenance easier.

The models can be supplied for operations as follows:

- TN: On / Off
- AB: High / Low
- PR: Progressive
- MD: Modulating

Enterprise burners feature a high performance combustion head which ensures safety and increased efficiency to minimise environmental impact. These units also feature simplified maintenance through convenient access to essential areas.

Performance Data

Product Code	Thermal Output Minimum kW	Thermal Output Maximum kW	Electrical Supply AC volts/Hz	Motor Output W	Light Oil Consumption Rate Kg/h min/max
LO 35.TN	21	41	240/50	75	1.8/3.5
LO 60.AB	25	60	240/50	100	2.0/5.0
LO 90.TN	40	85	240/50	150	3.0/7.0
LO 90.AB	24	85	240/50	150	2.0/7.0
LO140.TN	80	160	240/50	180	16/35
LO140.AB	38	160	240/50	180	9.7/35
LO200.TN	80	200	240/50	180	17/47
LO200.AB	38	200	240/50	180	13/47
LO280.TN	70	310	240/50	250	16/35
LO400.TN	195	420	240/50	370	16/35
LO400.AB	115	420	240/50	370	9.7/35
LO550.TN	200	560	240/50	620	17/47
LO550.AB	160	560	415/50	620	13/47
PG 60.AB	145	698	415/50	1100	12.5/60
PG 60.PR	151	791	415/50	1100	13/68
PG70.XX	291	1047	415/50	2200	25/90
PG81.XX	264	1900	415/50	3000	40/135
PG91	1047	2093	415/50	4000	-
PG91	698	2093	415/50	4000	-
PG92	849	2558	415/50	5500	-
PG93	550	4100	415/50	7500	-

Enterprise Dual Fuel Burners

35 - 13,000kW

The Enterprise dual fuel range are suitable for use with either natural gas/LPG or natural gas/light oil. This range of burners cover a firing range from 35kW to 13,000kW.

These burners have been carefully designed to provide maximum efficiency with either gas or light oil. Fuel change over is achieved by the "flick of a switch" which prompts the burner to carry out a controlled shutdown. The high performance fuel pump is driven by a separate motor and only operates when oil firing operation is selected.

The compact dimensions of these units greatly simplify maintenance. They all feature an aluminium die cast housing, an easily removed cover and a grill on the air inlet to prevent foreign materials being drawn into the fan. The combustion head is adjusted by means of a graduated screw.

Enterprise burners feature a high performance combustion head which ensures safety and increased efficiency to minimise environmental impact. These units also feature simplified maintenance through convenient access to essential areas.

Performance Data

Product Code	Thermal Output Minimum kW	Thermal Output Maximum kW	Electrical Supply AC volts/Hz	Motor Output kW	Pump Motor kW	Dry Weight Kg
HS5	35	70	240/50	0.10	0.10	23
HS10	65	140	240/50	0.15	0.10	30
HS18	80	200	240/50	0.15	0.10	31
HP20	85	230	240/50	0.37	0.10	70
HP30	65	350	240/50	0.37	0.10	70
HP 60.xx.40	170	523	415/50	1.10	0.55	115
HP 60.xx	170	880	415/50	1.10	0.55	125
HP 72.xx	330	1200	415/50	2.20	0.55	145
HP 72.xx	330	1550	415/50	2.20	0.55	145
HP 73A.xx	330	2300	415/50	3.00	0.55	155
HP91A	480	2670	415/50	4.00	0.55	290
HP92A	480	3050	415/50	5.50	1.10	300
HP93A	550	4100	415/50	7.50	1.10	315
HP512A	600	4500	415/50	9.20	1.10	340
HP515A	770	5200	415/50	11.00	1.50	360
HP520A	1000	6400	415/50	15.00	1.50	375
HP525A	2000	8000	415/50	18.50	4.00	390
HP1025	2550	8700	415/50	18.50	4.00	610
HP1030	2550	10600	415/50	22.00	4.00	680
HP1040	2550	13000	415/50	30.00	4.00	680

LMV Electronic Burner Control

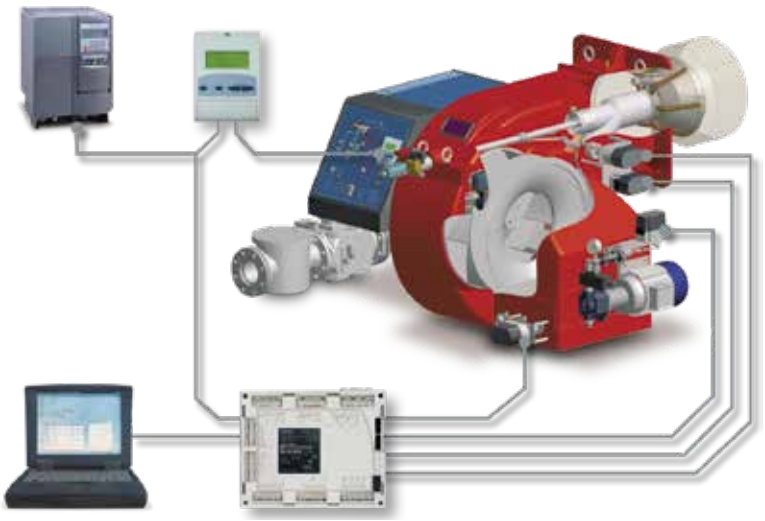

Electronic Cam and Control System for medium and high power gas, light oil, heavy oil and mixed fuel burners.

Automatic Heating, has adopted an electronic cam and control system in its line of Enterprise burners.

This innovative system, which has been divided into two types of flame control box, can be used for both commercial (from 140 kW) and industrial applications (up to 70 MW). Burners designed for use with a single or mixed fuel with continuous or intermittent operation and permits the command and control of all the various elements that plan a part in the correct mixture of the fuel and combustion air by means of an appropriately programmed flame control box.

This versatile solution oriented to the future permits the achievement of the maximum precision in combustion adjustment.

The system can also be expanded through interface with an oxygen control probe and/or a fan speed adjustment inverter in order to improve performance even further, in this way obtaining the highest savings in energy in terms of both the fuel and the electric power required.

The command and control system is composed of a twin-microprocessor electronic unit for the integration of all burner command and control functions, and a local programming and adjustment unit.

Integrated functions include air/fuel ratio adjustment (with work point configuration possibility), PID temperature or pressure regulator, gas valve leakage control, adjustable cycle times, pre-configured fuel trains and input/output configuration.

The programming levels are protected by password for the three types of user (manufacturer, servicing personnel, final user); dialogue between the servocontrol and the sensors is performed using twin-channel CAN Bus protocol in order to guarantee the greatest safety and reliability, and the unit can be installed directly in the machine or inside a separate electric control panel positioned no further away than 100 meters.

Using the appropriate designated optional software the system can be configured directly by PC.

Accessories

- Electronic Control Box LMV 51.100 (without O2 trim)
- Electronic Control Box LMV 52.200 (with O2 trim)
- Programme (AZL 5xx)
- Servomotor Air (SQM 4xx)
- Servomotor Gas (SQM 4xx)
- Servomotor Oil (SQM 4xx)

Features

- BMS Compatible
- 10-1 Turn Down Range

Flame control box integrated functions:

- Burner control
- Electronic cam
- Power regulator
- Gas valve leakage control system
- Oxygen control
- Inverter control
- Dialogue with BMS systems or PLC (MOD Bus)
- Burner commissioning and configuration via PC-tool
- Simple programming with AZL and PC-tool
- Complete self-diagnostic function (error memory, number of firings, burner operation time, clock, etc.)
- 3 levels of parameter access: (manufacturer, servicing personnel, final user)
- Remote diagnostics
- All components can be easily interchanged
- Parameter upgrading with PC-tool
- Dialogue with MOD Bus protocol

AutomaticHeating
efficiency □ performance □ solutions
ABN 73 611 897 600

Tel: 1800 337 959 / Fax: +61 3 9310 5655
sales@automaticheating.com.au

P.O. Box 35, Epping VIC 3076, Australia

www.automaticheating.com.au

17797 - 191024